PALI CAMPION srl
Via A. De Gasperi, 45 • 45025 Fratta Polesine (RO) • Italy
tel + 39 0425 668686 • mail@palicampion.it
www.palicampion.it

PALI E TORRI IN ACCIAIO STEEL COLUMNS AND MASTS

INSTRUCTIONS FOR ASSEMBLY, USE AND MAINTENANCE OF LIGHTING MAST WITH MOBILE CROWN

(with integrated hoist or trolley-mounted hoist, with or without safety brake system)

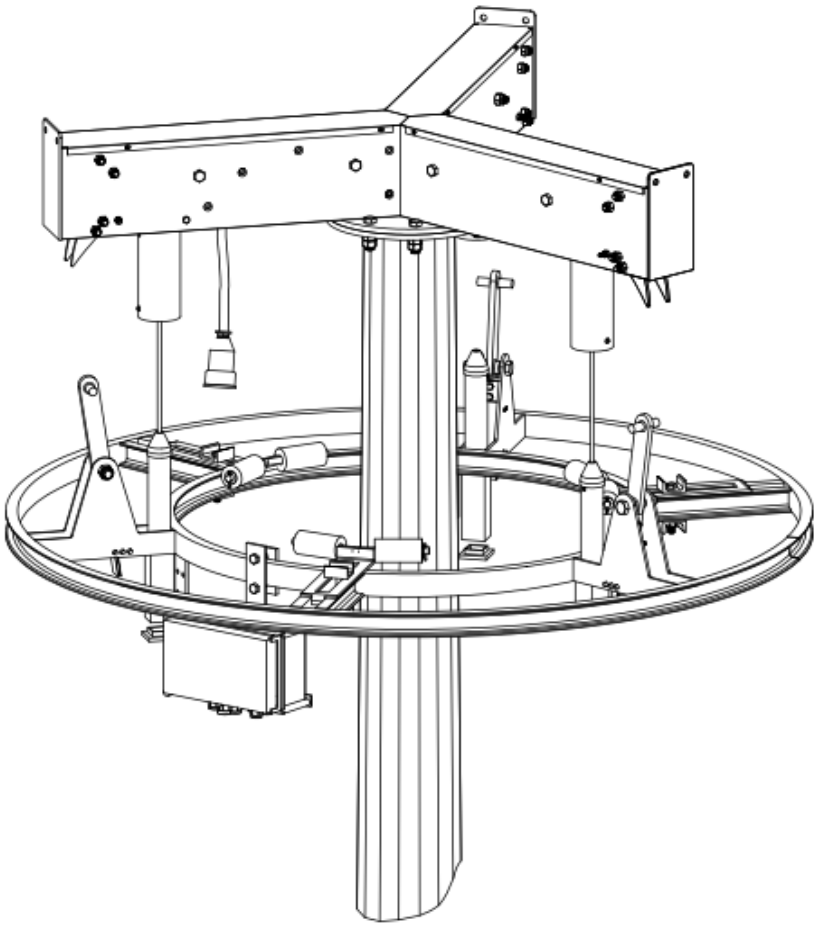

pec@pec.palicampion.it • P.iva 01429820291 • cod.dest. J6URRTW
ISO9001 • ISO14001 • ISO45001 • ISO50001 • SA8000 • EN40 • EN1090 • EN3834 • D.M.17/01/2018 • ISO14067

SUMMARY

1. INTRODUCTION 3
2. GENERAL DESCRIPTION OF THE MAST 3
3. PRELIMINARY DRAWING WITH DIMENSIONS AND WEIGHT 4
4. TRANSPORT, UNLOADING AND STORAGE OF THE LIGHT MAST 5
5. BOLTS, NUTS AND MATERIAL NECESSARY FOR THE ASSEMBLING 6
6. ASSEMBLY OF THE SECTIONS 7
7. ASSEMBLY OF TRAILING HEAD AND MOBILE CROWN 8
8. LIFTING AND CENTERING OF THE SHAFT 14
9. FIRST OPERATION OF THE MAST 19
10. INSTALLATION OF BRACKETS FOR FLOODLIGHTS AND ACCESSORIES 20
11. WIRING AND GROUND TEST OF FLOODLIGHTS 21
12. ROPES ADJUSTMENT 22
13. FIRST HOOKING OPERATION-SWITCH LIMITER ADJUSTMENT 24
14. PUT INTO SERVICE THE BRAKE SYSTEM 26
15. OPERATING INSTRUCTIONS 27
16. WARNINGS 28
17. DISMANTLING OF THE LIGHTING MAST 28

MANUAL MAINTENANCE 29
MAINTENANCES BOOK 36

INFORMATION NOTE 43

1. INTRODUCTION

This manual contains the instructions for the assembling, operation and maintenance of the lighting masts with mobile crown. **IN ADDITION TO THIS INSTRUCTIONS, YOU ALWAYS HAVE TO REFER TO THE WORKSHOP DRAWINGS PROVIDED AT TIME OF ORDER THAT COULD INCLUDE ADDITIONAL INFORMATION ABOUT PARTICULAR CASES**

2. GENERAL DESCRIPTION OF THE MAST

The lighting mast with mobile crown, it is a steel structure composed of:

Nontubular shaft in hot-dip galvanized steel, of conical shape with a polygonal cross-section, consisting of two or more sections that can be joined by forced overlap ('slip-on joint' method), produced by cold forming sheet metal followed by external longitudinal welding carried out using an approved automated MAG process.
The material used is steel grade UNI EN 10025-2 S355J0, with the following characteristics:

- minimum yield strength: 355 N/mm² (for thickness ≤ 16 mm)
- tensile strength: 470–630 N/mm² (for 3 ≤ thickness ≤ 100 mm)
- minimum percentage elongation at break: 20%

The anchorage to the base can be either by direct burying the foundation plinth or by base plate and anchor bolts. The shaft is equipped at the base of grounding connection, reinforced door for access to the internal equipment and, in the case of direct burying, a slot for cable entry. At the top it is provided with a flange for fixing the trailing head.

The trailing head made of hot galvanized steel, consisting of a 3-arms arranged at 120° housing the lifting cables and / the cord / the electric, designed for attachment to the stem by means of flange and bolts. The bracket is completely covered to grant the protection of the movement devices composed of polyamide pulleys 6.6 mounted on self-lubricated bushes and inox steel pivots. A system which prevents the hoisting and electric cable to go out of their groove is provided. The brackets of the ropes are provided with hooking and centering system of the mobile crown.
The trailing head is supplied assembled and completed with the lifting ropes (dimensioned with a minimum safety coefficient equal to 6) and of the electric cable(s) for the power supply of the floodlights.
The wiring ropes and the power cables are fixed at one end to the connection cylinder (distributor), while the other end is passed on relative arms and subsequently anchored to the mobile crown.

Mobile crown made of hot, dip galvanized steel profiles composed of two concentric rings connected by three ribs at 120°. On each rib is fixed the elastic hooking system composed of stainless-steel pivots and double steel metal foils; This enables the crown to be firmly attached to the trailing head completely releasing the hosting ropes from any load during normal operation of the mast. Upon request, the safety brake system can be installed, that locks the mobile crown to the shaft in the case of failure of the lifting ropes or the hoist chain.

It is provided an anti-rotation system that prevents the movement on the horizontal plane of the crown.
The floodlights and related boxes are mounted on special brackets made of hot-dip galvanized steel and are fitted to be fixed to mobile crown by bolts.

Electrical-system
The electric cable for the power supply of the floodlight is of self-supporting type having adequate section for the power to be installed. At the base of the mast (nearby the connecting drum) the cable is provided with CEE plug for connection to the interlocked socket fixed nearby the door, while on the top it ends inside the junction box which is fixed to the mobile crown. The junction box, completed with pre-wired terminal board, is equipped with socket watertight provided for the ground test using a purpose made extension with EEC plugs.

Electric hoist with suitable bearing capacity to the loads to be lifted required by the project; the mast can be provided with integrated version (the hoist is placed inside of the shaft) or trolley-mounted (the hoist is mounted in a separate structure from the mast).

The protection of the surface is obtained by hot dip galvanizing. The thickness of the zinc layer will be according to UNI EN ISO 1461.

PALI E TORRI IN ACCIAIO STEEL COLUMNS AND MASTS

3. PRELIMINARY DRAWING WITH INDICATION OF DIMENSIONS AND WEIGHT

MOD. CAMPION_V.DWG REV.01 (09/04) - Questo disegno è di proprietà della Pali Campion srl. Ne è vietata la riproduzione anche parziale, nonchè la presentazione a terzi senza la nostra esplicita autorizzazione.

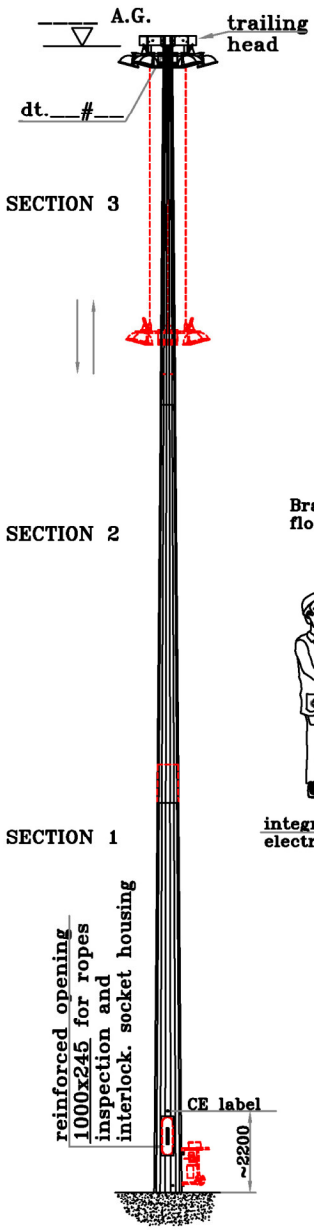

CHARACTERISTICS OF THE SHAFT:

- SECTION 3: L._____; D.____; d.____; th.__; overlap __
- SECTION 2: L._____; D.____; d.____; th.__; overlap __
- SECTION 1: L._____; D.____; d.____; th.__

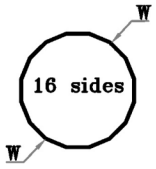

D. – d. circumscribed diameters

W = longitudinal MAG welding
- section 3 n.__ welding(s)
- section 2 n.__ welding(s)
- section 1 n.__ welding(s)

MOVEMENT DETAIL

INTEGRATED VERSION

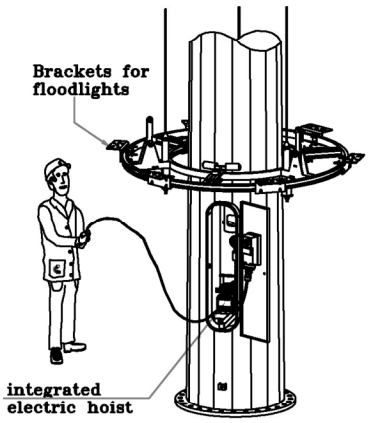

TROLLEY-MOUNTED VERSION

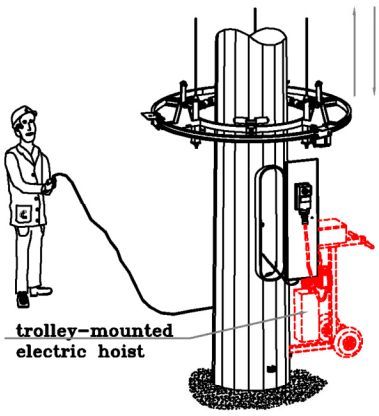

SEC. A–A

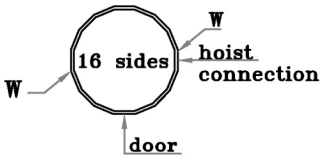

Weights:	Kg.	
SECTION 1	~	
SECTION 2	~	
SECTION 3	~	
mobile crown	~	
brackets for floodl.	~	
trailing head+cable and distributor	~	
TOTAL WEIGHT WITHOUT FLOODLIGHTS	~	

Protection:
HOT-DIP GALVANISED ISO 1461

Materials:
- steel sheet steel grade EN10025-2 S355J0
- tube steel grade EN10219-1 S235JRH
- plates steel grade EN10025-2 S355J0

N.REV.	DATA	NOTA DI REVISIONE	DISEGNATORE	APPROVAZIONE
00	__/__/__	Prima emissione	G.B.	A.Z.

Q.ty N°

EMISSIONE O.D.P.

CONTROLLO | PRODUZIONE

CODICE / DISEGNO | FORMATO STAMPA A4 | PAGINA 1/__

DIMENSIONS IN MILLIMETRES
Tolerances on dimensions: -UNI EN40/2; EN10219/2; EN10051

CLIENTE | RIF. COMMESSA

pec@pec.palicampion.it • P.iva 01429820291 • cod.dest. J6URRTW
ISO9001 • ISO14001 • ISO45001 • ISO50001 • SA8000 • EN40 • EN1090 • EN3834 • D.M.17/01/2018 • ISO14067

4. TRANSPORT, UNLOADING AND STORAGE OF THE LIGHTING MAST

TRANSPORT

The lighting mast is provided to be assembled in the following packages:

- N.1 bundle for each section
- N.1 bundle for the trailing head
- N.1 bundle for the mobile crown
- N.1 bundle for electric hoist and driving whirl, if any
- N.1 bundle for the bracket for floodlight supports and ballasts if any, bolts nuts, distribution box and door.

During transport, care should be taken to ensure the mast in such a way as to prevent damage (such as crushing and / or distortion) of the most breakable parts (the trailing head, crown, door) due to the heavier parts (shaft).

UNLOADING

The unloading must be carried out with suitable means to lift the weights indicated in the previous chapter, slinging the section with suitable strips or chains arranged in such a way that the sections are balanced as shown in the photo below.



STORAGE

the storage of the shaft, the mobile crown and the trailing head can be done outside avoiding the direct contact with the ground; to this purpose it is useful to arrange the material on some raised supports.
The trolley mounted hoist, the door, the distribution box and bolts and nuts must be kept in a covered and dry place.

5. BOLTS AND MATERIAL NECCESSARY FOR THE ASSEMBLING

Description	Q.ty	Aim	Type of mast	Given with the supply
Screws M18x60 TF complete with 2 middle nut M18	6	Hooking of the trailing head to the top plate of the shaft	All	YES
Screws M16x40 TF complete with plain washer	2	Fastening of the hoist support to the shaft	Integrated	YES
Screw M18x90 TF complete with plain washer	1	Fastening hoist support to the mast shaft	Integrated	YES
Blocks for cable fixing	(*)	Fasten the electrical cable to the mobile crown	All	YES
Tir-for	2	Overlap the section composing the shaft	All	NO
Pilot probe having length at least equal to the height of the shaft	1	Facilitate the insertion of a rope within the shaft used for the insertion of the distributor	All	NO
Ropes having at least a length equal to the height of the shaft	2	Facilitate the lowering of the mobile crown during the adjusting phase	All	NO

(*) The number of the pairs of cable clamp blocks is a function of the number of the present electrical cables. It is provided a pair of blocks for each electrical cable.

6. ASSEMBLY OF THE MASTS

Put the masts on wooden edges in such a way that the longitudinal welding line of each shaft coincides with that of the next one.
The door opening of the base section must be turned upwards, NEVER downwards. The mark made on the top plate must be in axis with the door (see figure below). Before proceeding with the assembly, you need to be sure that the overlapping areas are free from gravel pebbles or dirt (which may be enter during unloading / handling / storage phases) that can cause problems during the forced overlapping phases.

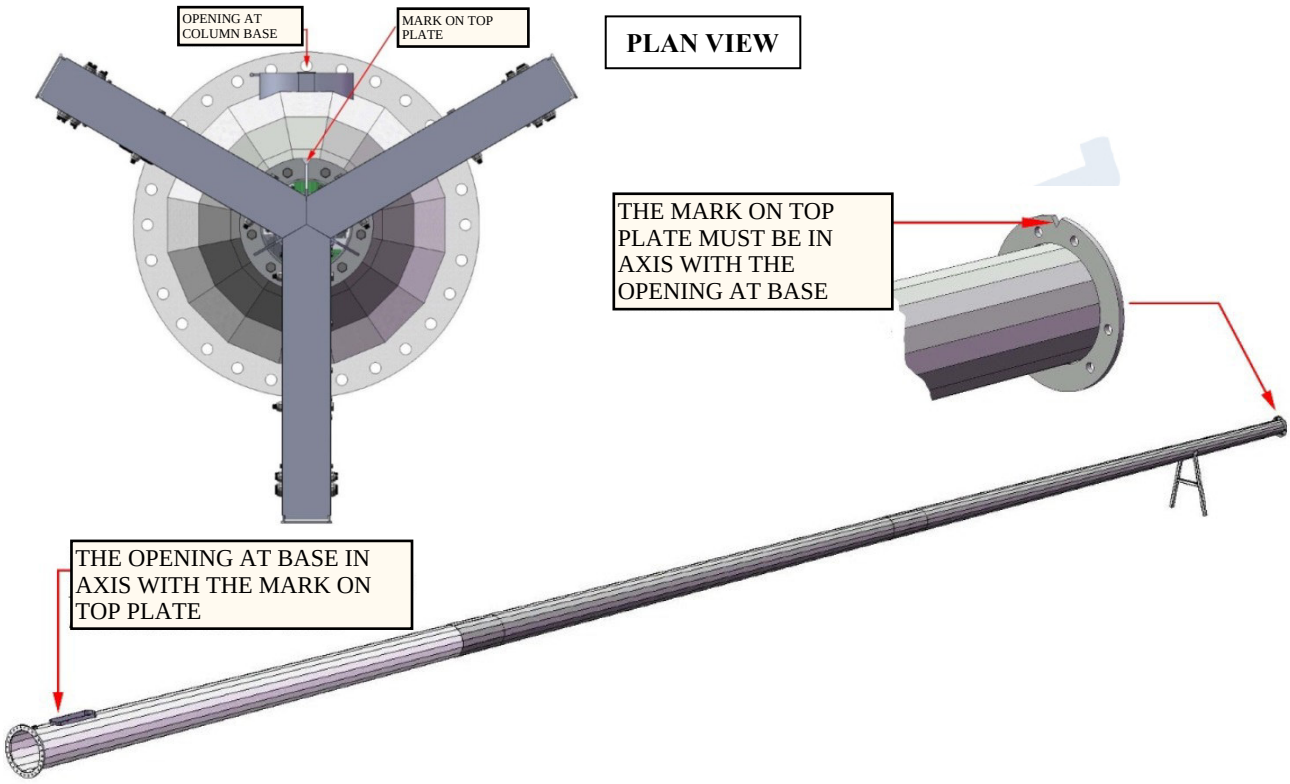

The assembly of the masts is made by using 2 tir-fors (pull and lifting machines) hooked to the ends of the sections, starting, in the case of mast in 3 or more elements, to assemble the base section with the next one and proceeding gradually up to the top section. **THE MASTS MUST BE OVERLAPPED TO REFUSAL**.

Note: If two tir-fors are not available, a forklift truck or an excavator may be used to apply pressure to one end (the one with the larger diameter), having first secured the other end to a fixed support. A forklift truck is, however, essential on site for handling the logs.

7. ASSEMBLING OF THE TRAILING HEAD AND MOBILE CROWN

Before to assemble the trailing head and the mobile crown is necessary to put the mast in sloped positions raising the top end around 1m above the ground; if the shaft is composed in 3 or more sections it is better to arrange a support in the central part of the shaft to avoid that the tower can flex. Moreover, if it is possible, it's good to put the shaft in proximity to the foundation block in order to reduce to a minimum the handling operations with the mast suspended during the lifting operations.

Then proceed with the following steps:

- Ensure that the crown locking devices are secured in the outer position
- Insert the crown into the top of the tower so that the centering sleeves are facing the top of the mast
- Insert the 'pilot probe' (excluded from the supply) from the top of the mast, guiding it down the mast until it is visible through the base door; attach a rope (excluded from the supply) to the upper end of the pilot probe (the end protruding from the tip of the shaft), then pull the probe (at the base of the shaft) so that the rope enters the shaft. Release the pilot probe.
- Position the trailing head near the tip of the mast, unrolling the cable and ropes along the axis of the mast
- Tie the end of the rope protruding from the tip of the mast to the distributor
- Insert the distributor into the mast (by pulling on the free end of the rope), taking care not to damage the ropes or the electrical cable, and stop it when it emerges from the door at the base
- Secure the trailing head to the top plate using 6 HH M18x60 TF screws and the corresponding nuts supplied with the kit.

NOTE: On the trailing head there is a mark "DOOR SIDE"; such mark must be the axis with the door at the base of the mast.

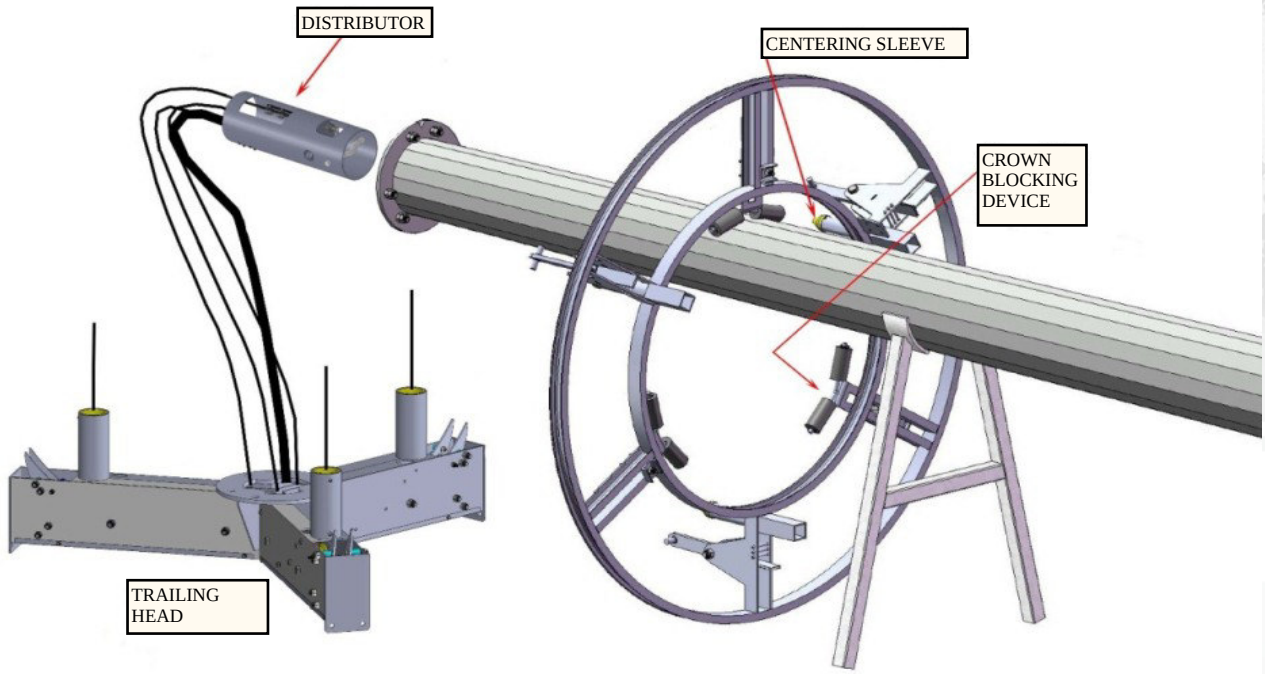

- Pass the cables inside the centering sleeves as shown in figure

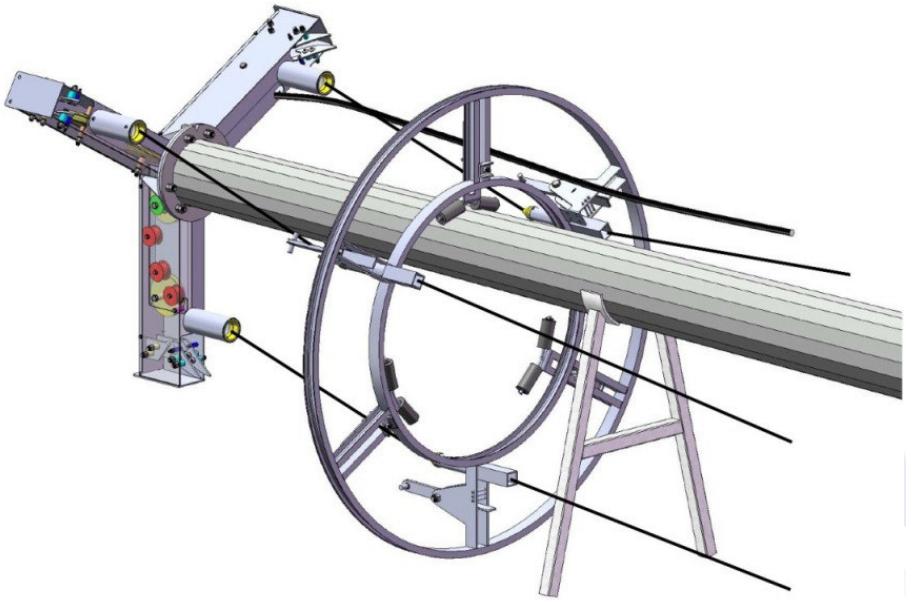

- Hook the crown to the trailing head locking it with 3 edges so that it doesn't unhook

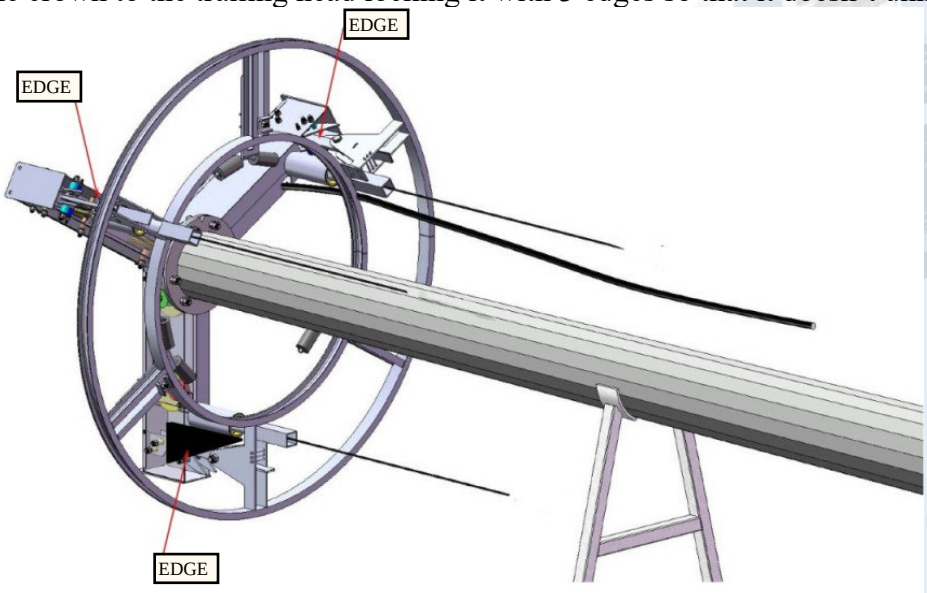

- **[Only for the integrated version]** Fix the hoist support (and the integrated hoist) using the two M18x90 TF screws and move the distributor so that its distance from the limit switch is 500mm as shown in picture. Lock the distributor with the safety chain supplied

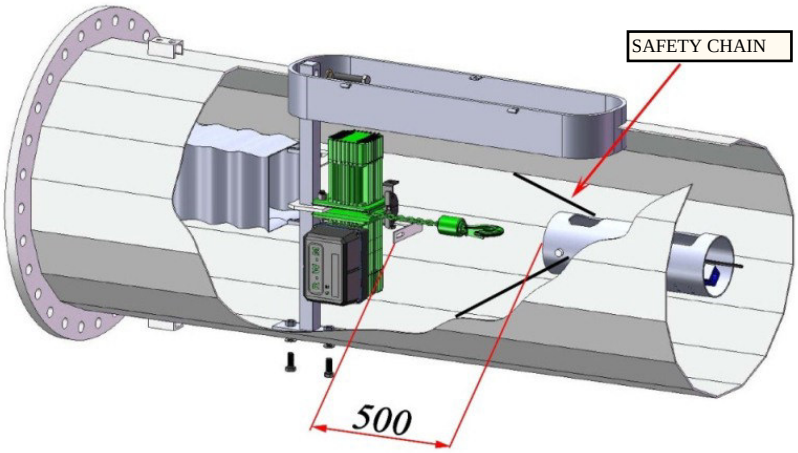

- **[Just for the trolley mounted version]** Insert and secure the driving whirl from the purpose made opening on the side of the shaft and move the distributor so that its distance from the limit switch is 500mm as shown in picture. Lock the distributor with the safety chain supplied.

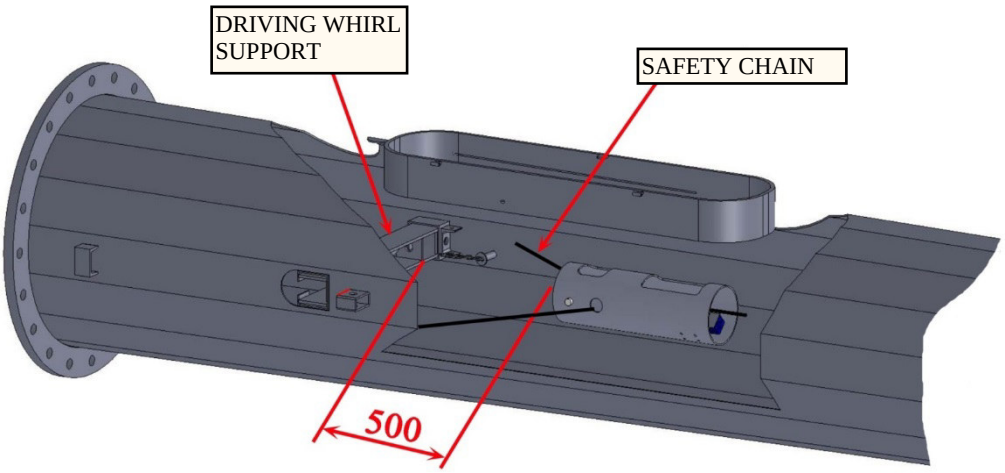

- Pull the ropes and the electric cable until they are tensioned (DO NOT PULL THEM FROM THE BASE, BUT FROM THE HEAD), then mark them with a marker pen as shown below:

- **MOBILE CROWN WITHOUT SAFETY BRAKE SYSTEM**

- Pull the ropes one by one and get ready to mark them
- The ropes must be marked at the end of the tubular profile
- The electrical cable must be marked at the centerline of the holes for attaching the cable clamps
- Whilst tensioning the ropes and the electrical cable, make a mark with a marker

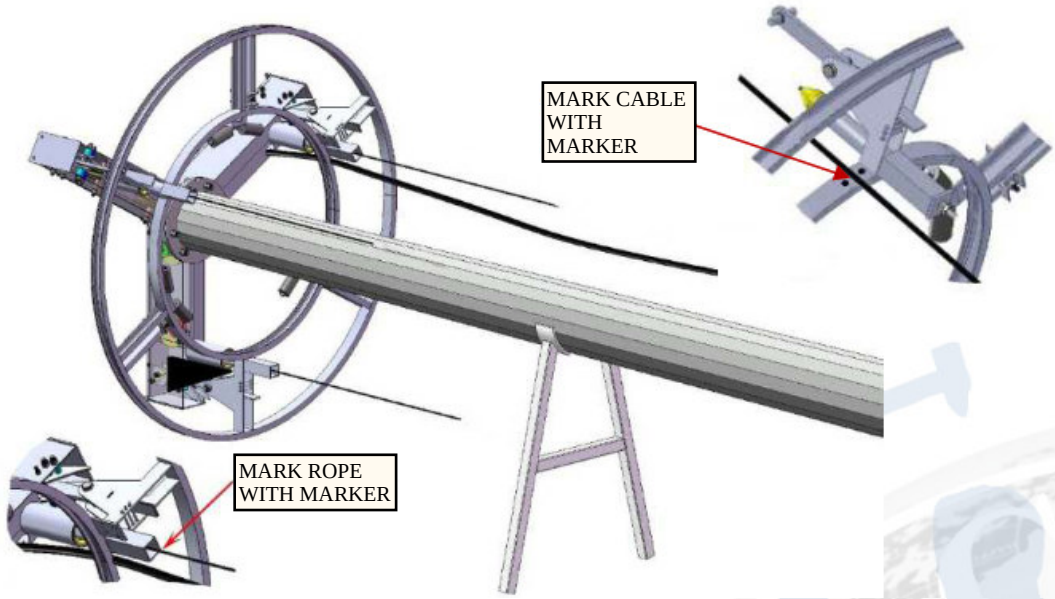

- **MOBILE CROWN WITH SAFETY BRAKE SYSTEM**

- Spin the rope around the pulley of the brake and mark it at the center of the redance attached to the tie rod of rope adjuster
- The electrical cable must be marked in the center line of the connection of cables blocks

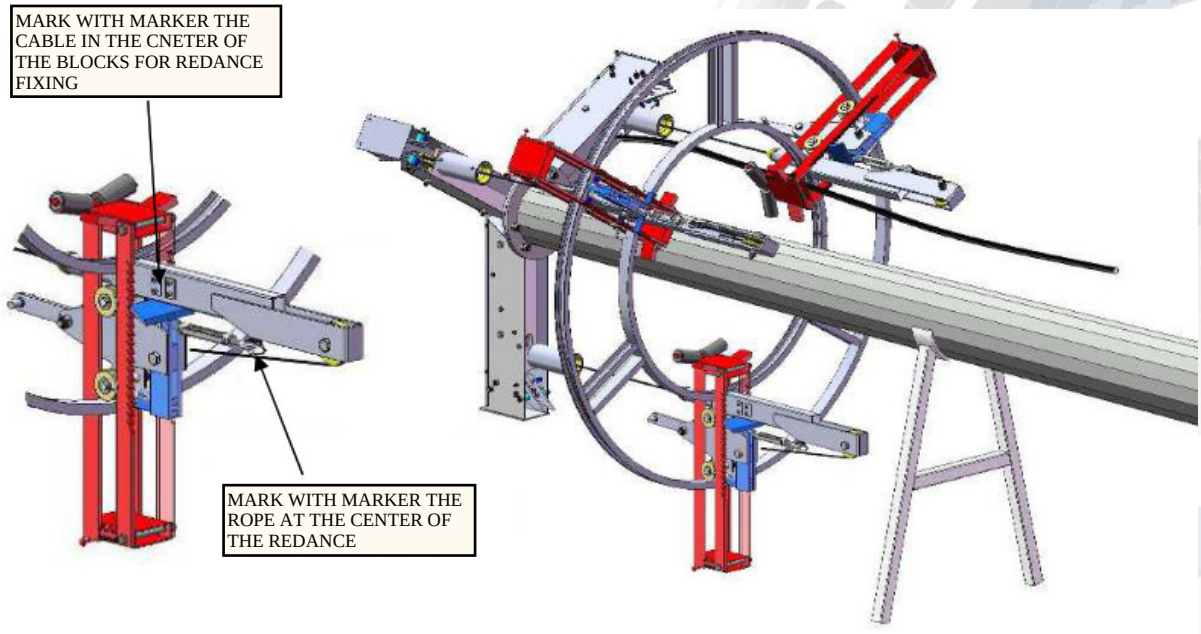

- Unhook the distributor and move it to the upper edge of the door, then lock it in this new position. Pull the ropes again on the top so they exit from the centering pivots. Cut the ropes at 23 cm away from the mark previously done. Fold the ropes around the redance, ensuring that the centerline of the mark remains in the center of the redance.

- Insert the eye pin into the pulley as shown in the figure (for the system with mobile crown without a safety brake) or insert the tensioning pin into the redance (for the system with mobile crown with safety brake).

- Use the U-bolts (4 per cable) to secure the cable (as shown in the figure below).

CAUTION!!! The fixing of the rope with 4 clamps must be done as shown in the drawing below. This operation is among the most important one and delicate because if it isn't done properly, it can result with the time being, in loosening and sliding of the rope preventing the unhooking of the mobile crown. To obtain the maximum efficiency it is recommended to place the clamps in the way shown in the picture (the incorrect assembly of the attack decreases the efficiency of 60% with respect to the breaking load of the rope).

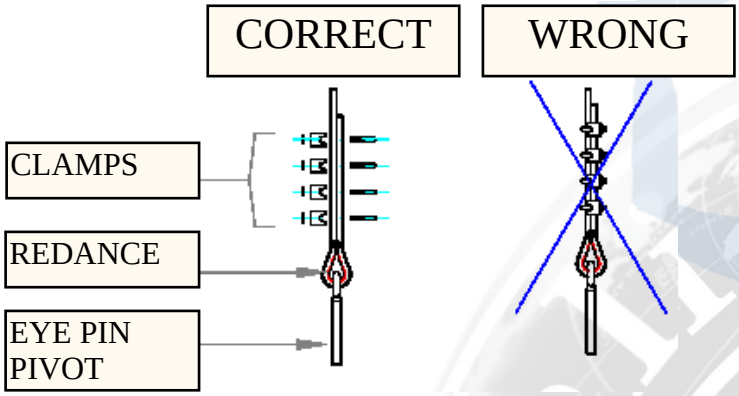

- Once the cable has been secured to the redance, fit the MG105 component using N°2 M14 high nuts

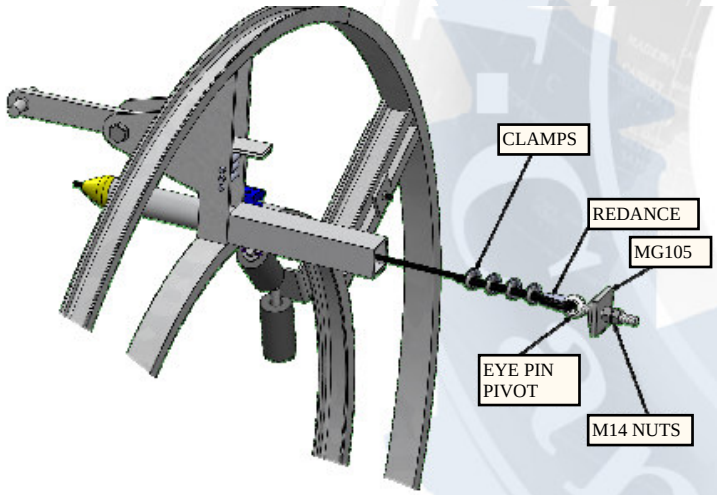

- Unhook the mobile crown from the trailing head.
- Fix the power cable on the mobile crown by means of the purpose made block cable devices
- Fix the 2 ropes having length suitable to the shaft, to the outer circle of the mobile crown close to the connecting rods.

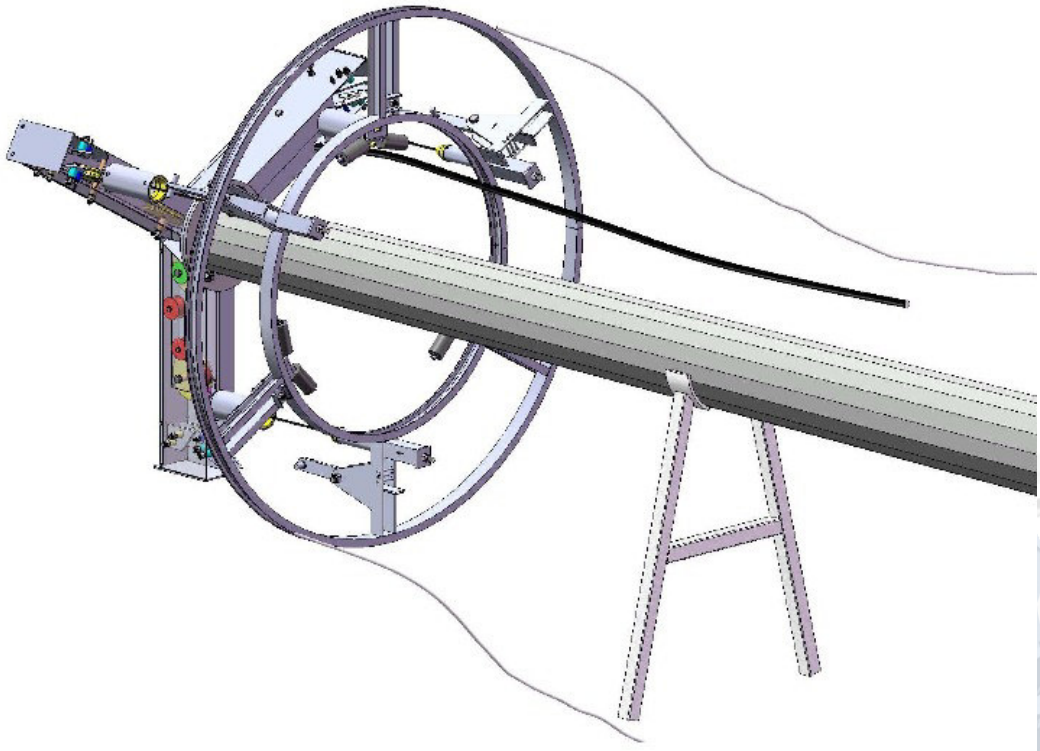

BEFORE LIFTING THE MAST MAKE SURE THAT THE DISTRIBUTOR IS FIXED TO THE BASE OF THE MAST BY MEANS OF THE SAFETY CHAIN INCLUDED IN THE SUPPLY.

8. LIFTING AND CENTERING OF THE SHAFT

To lift the mast, it is necessary to use a crane of suitable capacity (refer to the table of weights in drawings) which secure the shaft about 3/4 of its height.

Secure the mast about 3/4 of its height taking care to insert, in the harness itself, a steel cable 16 (minimum) whose other end is fixed to the earthing device of the shaft. The rope will prevent the harness to climb due to the effect of the conicity of the shaft.

N.B.: For safety reasons it is good that within range of the crane there is only people and means concerned to the assembling of the lighting mast.

Hereby You can find the operation to be taken to lift the mast either in case of direct burying and with base plate and anchor bolts

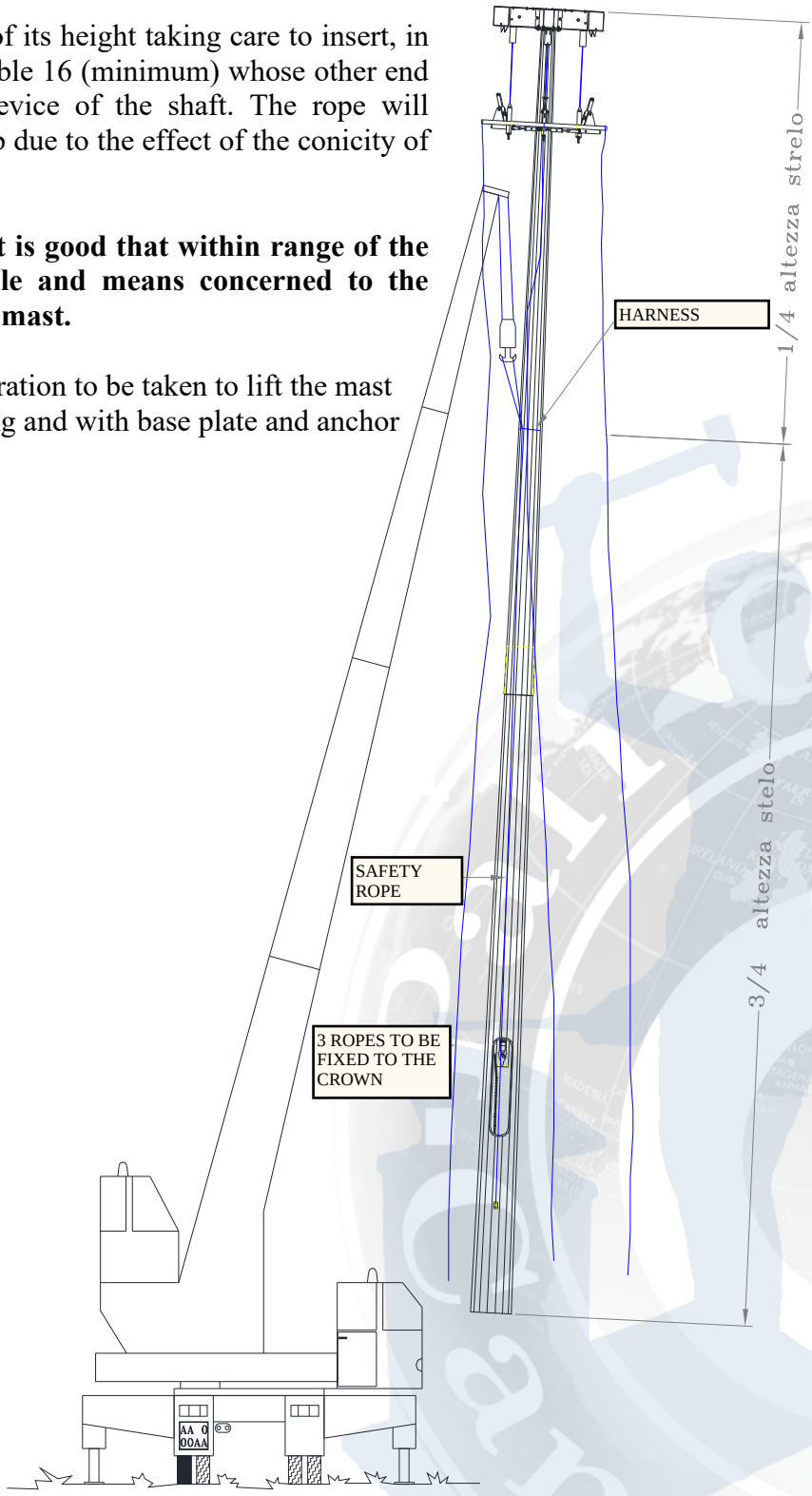

MAST TO BE BURIED INTO THE FOUNDATION BLOCK

Following the below operations to plumb the mast:

- With the bracket of the crane put the mast inside the foundation block, as much as possible to the vertical position
- Put around the mast sand (or even better broken pebbles) up to a height of approx. 50 cm and press properly
- Insert 4 wooden edges (better if knots) around the mast and forced them so that the mast cannot move anymore
- Let the crane free
- Act on 4 edges to plumb the mast

Pass the tube for the cable through the suitable slot on the mast; filled with sand (or broken pebbles) the place around the mast and press it until 2/3 of the height. Close with cls **as the same type as that used to make the foundation block**

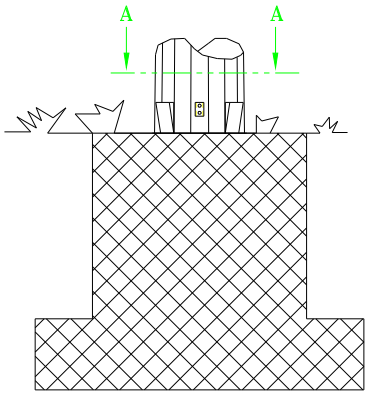

SECTION A – A

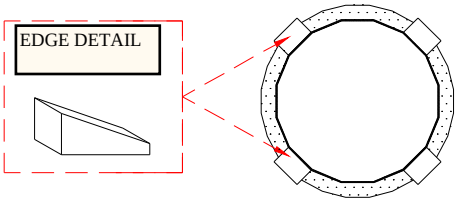

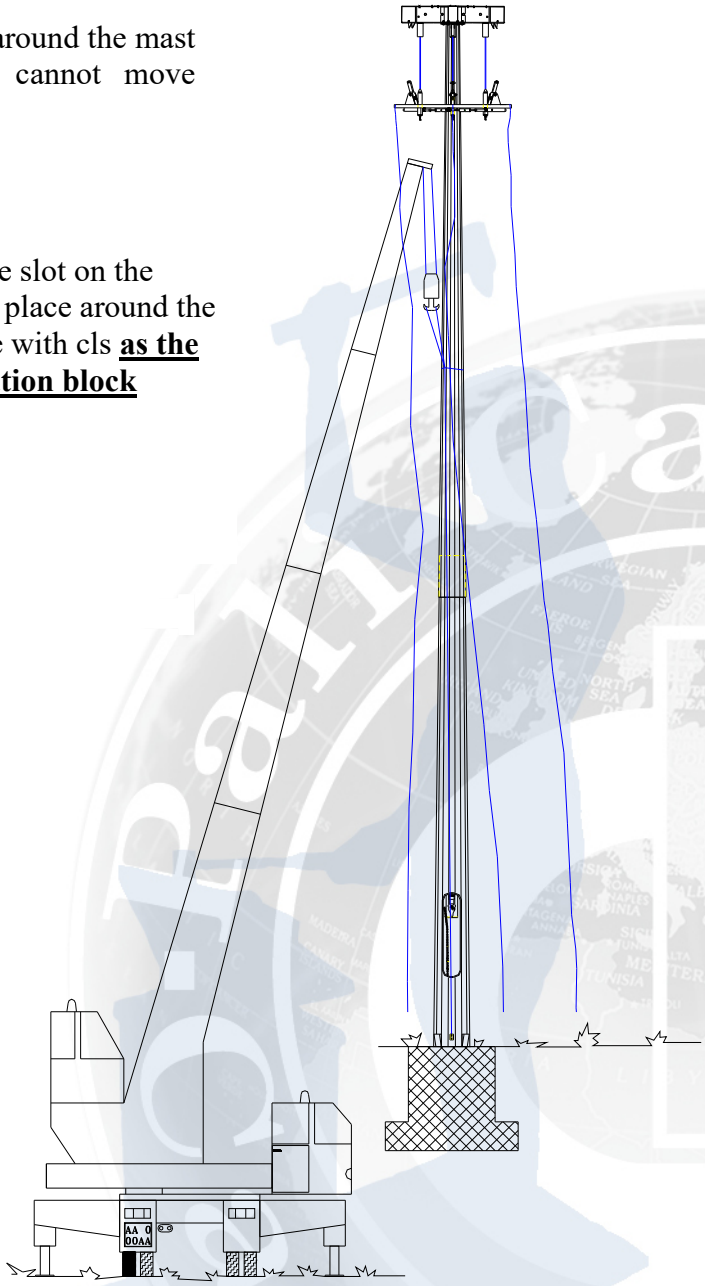

MAST WITH BASE PLATE AND ANCHOR BOLTS

Following the below operations to plumb the mast:

- Tight the lower nuts and insert washers on the anchor bolts
- Low down the mast on the anchor bolts
- Insert the washers and tight the upper nut on the anchor bolts
- Let the crane free
- Acting on the lower and upper nuts plumb the mast
- Tight the nuts and lock them

N.B.: Clean well with the brush the threaded part of anchor bolts before tightening the nuts and grease it

ALSO, WE RECOMMEND to perform the sealing of base plate using expansive mortar taking care to protect the threaded zone of anchor bolts with bituminous painting. **<u>As alternative</u>** performed a concrete collar to cover completely either base plate and anchor bolts

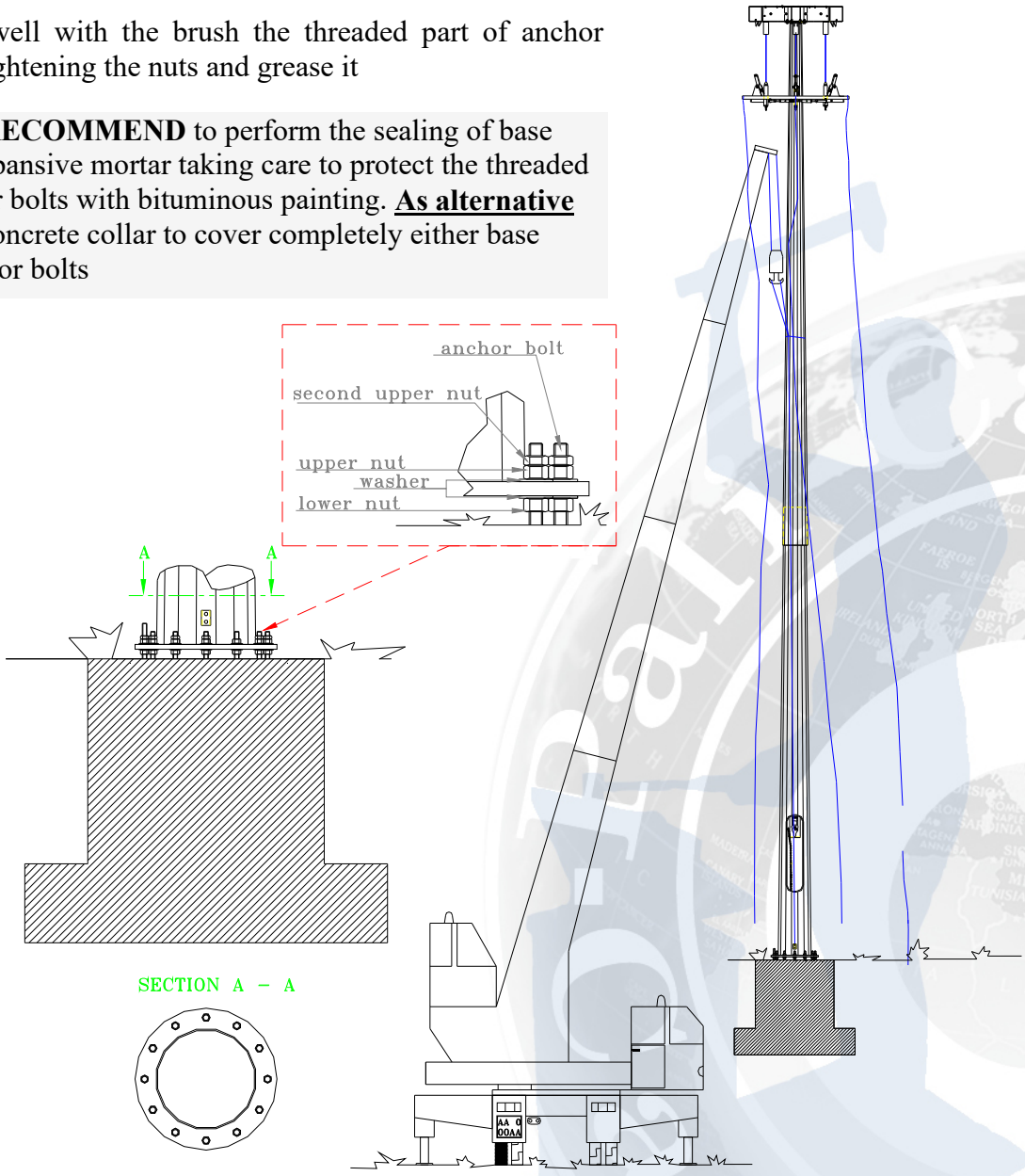

INFORMATION NOTE

CLARIFICATION ON THE APPLICATION OF TIGHTENING TORQUE

The tightening torque is needed to give a force to the bolt in order to prevent the sliding between the two parts to be joined making thus a friction union; this force, as it is suggested from the D.M. 17/01/2018 "technical standard for constructions", is assumed equal to 70% of the ultimate resistance to traction of the bolts according to the formula:

$$F_{p,Cd} = 0.7 \cdot \frac{f_{th} \cdot A_{res}}{\gamma_{M7}}$$

To which it is associate a tightening torque equal to:

$$M = k \cdot d \cdot F_{p,Cd}$$

where:

f_{th} = resistance to traction of the bolt
A_{res} = resisting area of the bolts (reduced of the threaded part)
γ_{M7} = safety coefficient (equal to 1.1 for high resistance bolts prestressed)
k = safety coefficient given by the producer
d = nominal diameter of the bolt

The scope of the friction union is that on to bring to contact the two parts to be joined so that they do not slide one on the other, causing as a consequence a traction stat on the shaft of the bolt until to reach values near to the yield point. In fact, considering a bolt class 8.8 [yield point 640 MPa, braking load 800MPa], the pre stressing force is equal to:

$$F_{p,Cd} = 0.7 \cdot \frac{f_{th} \cdot A_{res}}{\gamma_{M7}} = 0.7 \cdot \frac{f_{yh}}{0.8} \cdot \frac{A_{res}}{1.1} \cong 0.8 \cdot f_{yh} \cdot A_{res}$$

where f_{yh} = resistance to the yield point
We reach therefore values near to the 80% of the yield point

In case of structures with base plate the connection between plate and foundation block isn't a friction bolted union working with prestress, therefore the verification of the tightening torque by means of a dynamometric key. In fact, the task of the anchor bolts is to transfer the stresses deriving from the upper structure to the foundation block, that is to maintain the structure in its place avoiding the overturning.
Furthermore, we underline that to apply a tightening torque to the anchor bolts can be counterproductive because You will pre stress the anchor bolts with a force equal already to the 80% of the yield point (maintaining only 20% as reserve for the external actions).

For the above-mentioned reasons MUST NOT BE APPLIED THE TIGHTENING TORQUE PRELOAD the nuts of bolts or bolts in general of our products (unless explicitly stated otherwise reports on the drawings).

THE BOLTS MUST BE TIGHTENED USING STANDARD SPANNERS AVAILABLE ON THE MARKET, WITHOUT EXTENSIONS OR SIMILAR DEVICES, USING THE AMOUNT OF FORCE THAT AN AVERAGE PERSON CAN EXERT.

You can define approximately the applied torque values, according to the following assumptions:

- Considering that bolted joints must not be subjected to preload
- Considering that simply tightening the bolts forced with the normal human strength
- Considering that the maximum stress that a normal man can exercise safely, is defined in 25kg (Decree Law 81/08 - ISO 11228)
- Considering the length of the standard fork spanner

You can calculate the tightening torque using the following formula: $M = F \cdot L$, where F = applied force (max 25 kg ~ 245 N) and L = spanner length

In the following page there is a table referred to the fork spanner which can usually be found in commerce.

Simple fork spanner	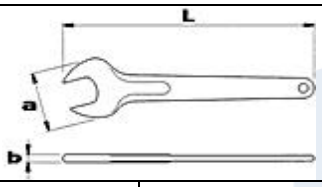	
	Spanner dimens.	L [mm]
	**10**	120
	13	145
	17	160
	19	175
	21	175
	22	196
	24	196
	26	216
	27	216
	30	240
	32	270
	35	300
	36	300
	38	300
	41	340
	42	340
	45	376
	46	376
	50	420
	55	450

9. FIRST MOVEMENT OF THE MAST (INTEGRATED HOIST)

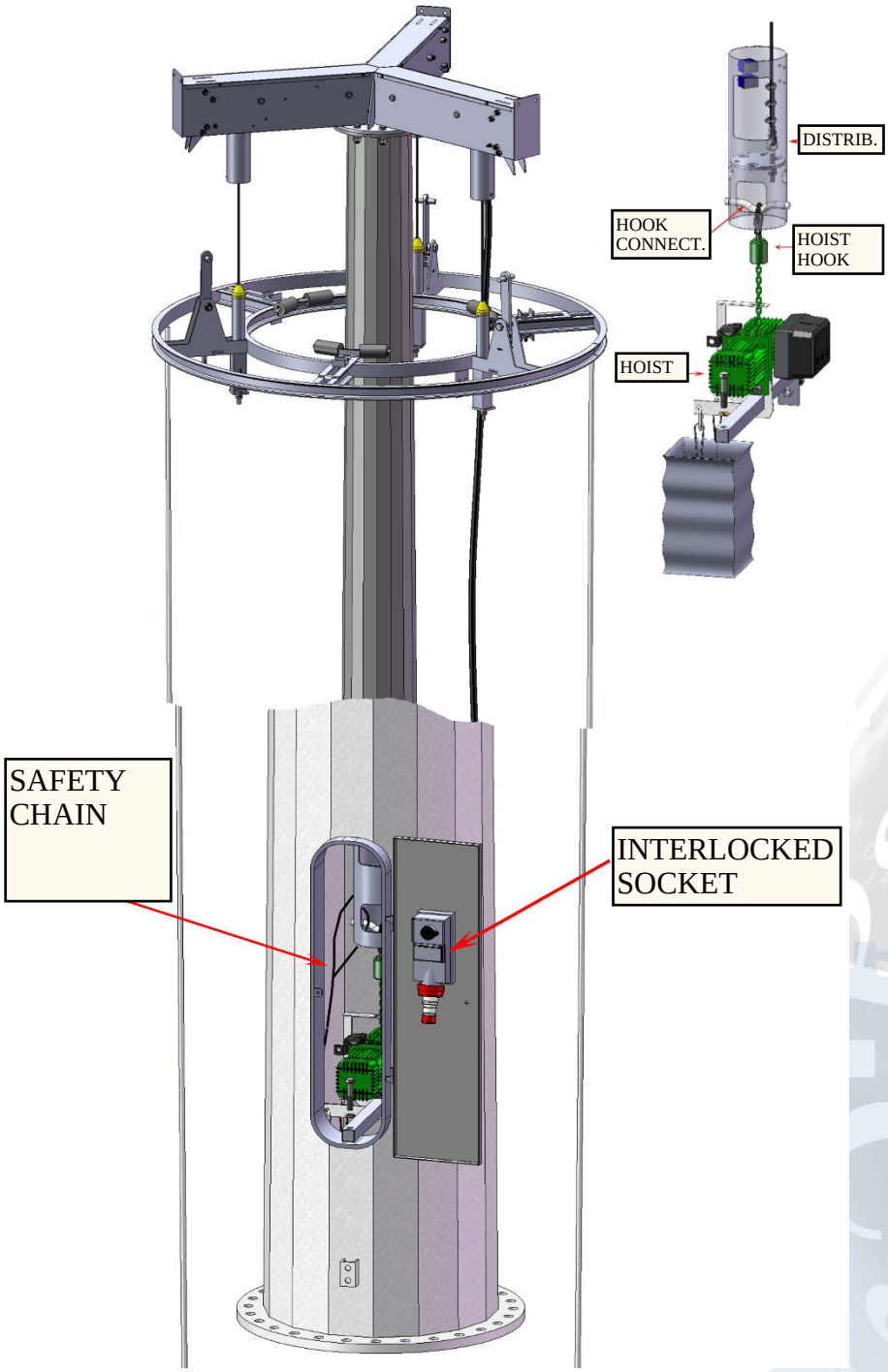

Proceed as follow:

- Give power to the electric hoist by plugging it into the socket
- Check the correct sequence of steps:
BUTTON UP the chain enters inside the hoist
BUTTON DOWN the chain comes out of the hoist
THE SWITCH LIMITER ROD WORKS ON THE RAISING PHASE, SO FOLLOW THE STEPS UP/DOWN

- Fix the hoist to the distributor

- Put in tension the chain of the hoist until the security chain is loose

- Remove safety chain

- Bring down the mobile crown, (Since there are no weight mounted on the crown you may need to take action on the ropes to lower the crown down).

CAUTION DURING THE LOWERING CHECK THAT CHAIN OF THE HOIST IS ALWAYS UNDER STRESS.

FIRST MOVEMENT OF THE MAST
(TROLLEY-MOUNTED HOIST)

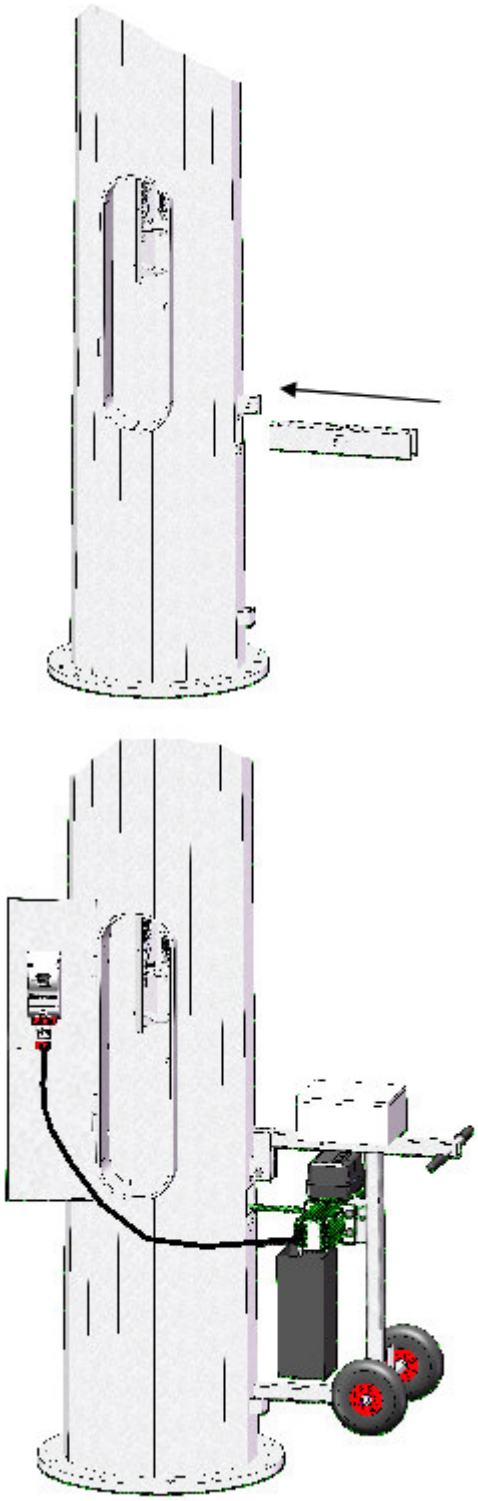

Proceed as follows:

- Insert the driving whirl support into the tower
- Secure the trolley-mounted hoist to the base of the tower using the screw provided
- Connect the electric hoist by plugging the lead into the interlocked socket.
- Check the correct sequence of steps:
BUTTON UP the chain enters inside the hoist
BUTTON DOWN the chain comes out of the hoist

THE SWITCH LIMITER ROD WORKS ON THE RAISING PHASE, SO FOLLOW THE STEPS UP/DOWN

- Thread the hoist chain through the driving whirl support
- Fix the hoist hook to the distributor
- Tension the hoist chain until the safety chain slackens.

ATTENTION: THE LINKS IN THE CHAIN MUST BE ORTHOGONAL TO ONE ANOTHER.

-Remove the safety chain
-Lower the mobile crown (as there is no weight fitted to the crown, you may need to pull on the ropes to lower it).

ATTENTION: WHEN LOWERING, ENSURE THAT THE HOIST CHAIN IS ALWAYS UNDER TENSION

10. INSTALLATION OF CROSSBARS, FLOODLIGHTS AND ACCESSORIES

– Secure the floodlights supports brackets on the mobile crown and then fix the floodlights on the brackets (following the indications of any lighting project out of scope of supply)

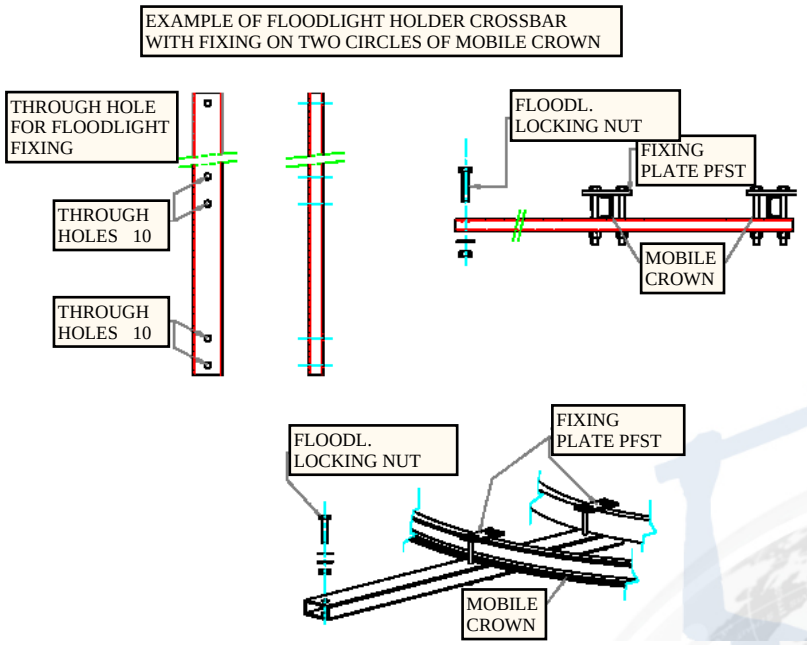

EXAMPLE OF A FLOODLIGHT SUPPORT BRACKET FIXED
TO THE OUTER CIRCLE OF THE MOBILE CROWN

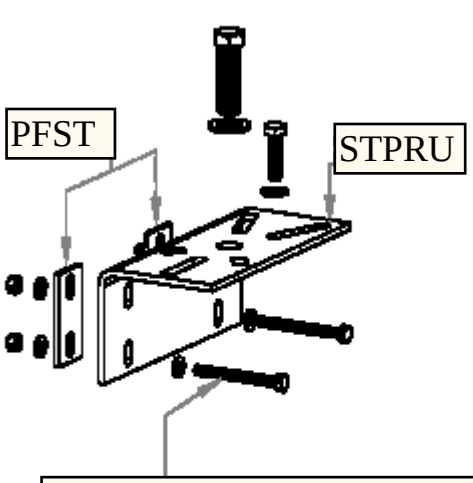

N°4 SCREWS HH M8X60TF
N°4 MED. NUTS M8
N°4 PLAIN WASHER M8



STANDING
FLOODLIGHT VERSION



– If included in the supply, fix the brackets for ballasts support to the mobile crown following the indications in the workshop drawings.

– Fix the junction box to the mobile crown nearby to the power cables.

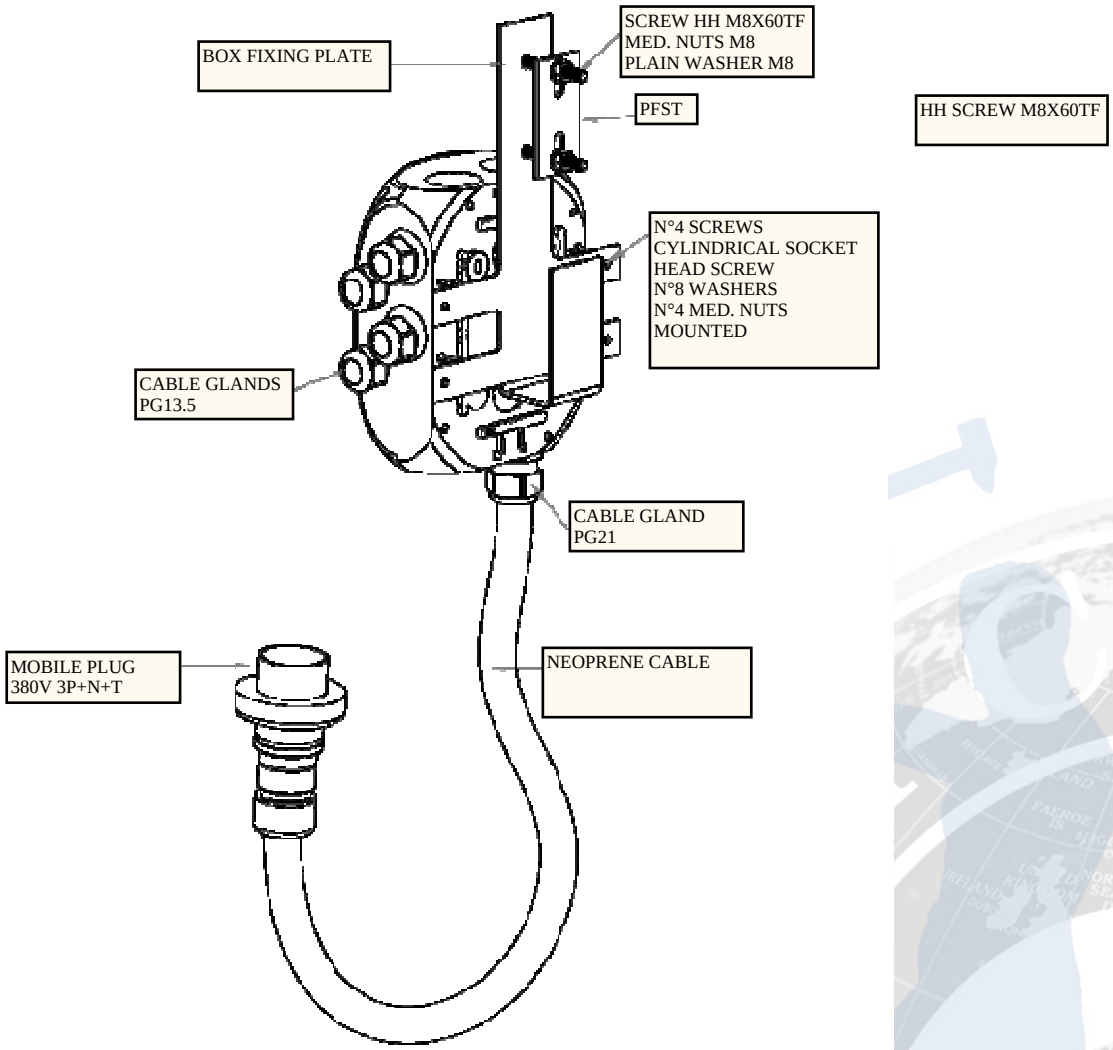

– Before securing the power cable to the cable blocks of the mobile crown, you must tighten the cable as much as possible.

– At this point the wiring of the floodlights can be done.

11. WIRING AND TESTING GROUND OF FLOODLIGHTS

The floodlights are powered by one or more lines five-cores. The junction box (usually one for each line) is provided with an EEC plug connected upstream of the terminal block; in normal operation to it is connected the socket referred to the power cable.

To carry out the "GROUND TEST " of the floodlights take off the plug and connect it to the socket at the base of the shaft by means of the purpose made extension included in the supply.

Note: ALL THE OPERATIONS OF SWITCH OFF AND SWTICH ON THE ELECTRICAL ACCESSORIES TO CARRY OUT THE GROUND TEST, MUST BE CARRIED OUT WITH THE SWITCH JACK OF THE SOCKET IN ZERO (0) POSITION, THAT IS WITHOUT POWER.ONCE THE CONNECTIONS ARE ESTABLISHED, AND ONLY THEN, YOU CAN PUT THE SWITCH IN WORKING POSITION (1).

12. ROPES ADJUSTMENT

Mark on each cable with a permanent marker the position where to place the rope adjuster that is about 80 cm from the base of the centering sleeve.

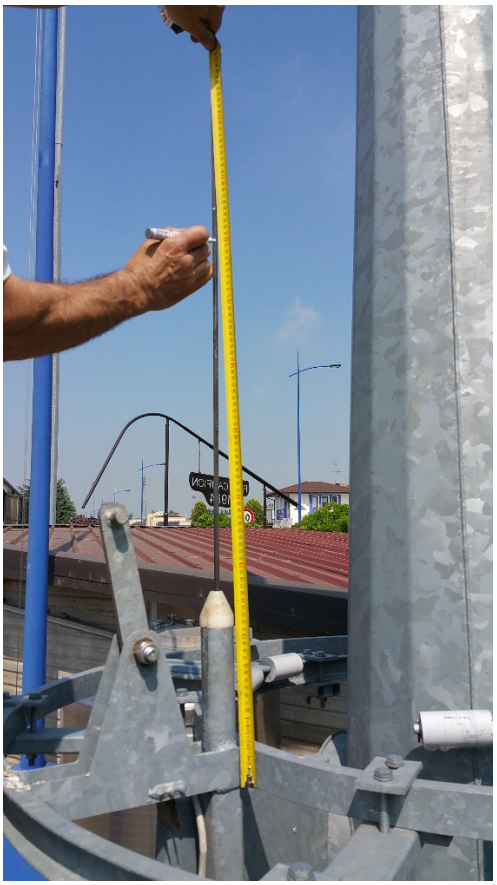

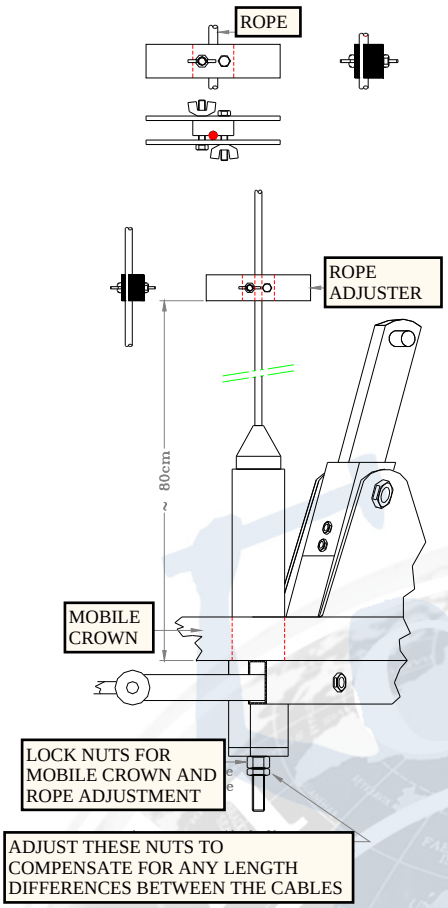



Raise the mobile crown until you see the distributor appearing on the door **(WARNING: the Mobile Crown must not hook to the trailing head)** When You see the distributor the rope adjuster stroke on the grooves of the centering pivots of the trailing head. Continue for approx. another 10cm.



Lower the mobile crown and measure the distance between the rope adjuster and the base of the centering pivot of the three wires ropes.





The differences in measure recorded are going to be even out screwing (or unscrewing) the nuts of the mobile crown.
Repeat the operations described above for all the 3 ropes; in detecting the new measures no difference should be found. Otherwise, it levels it again.

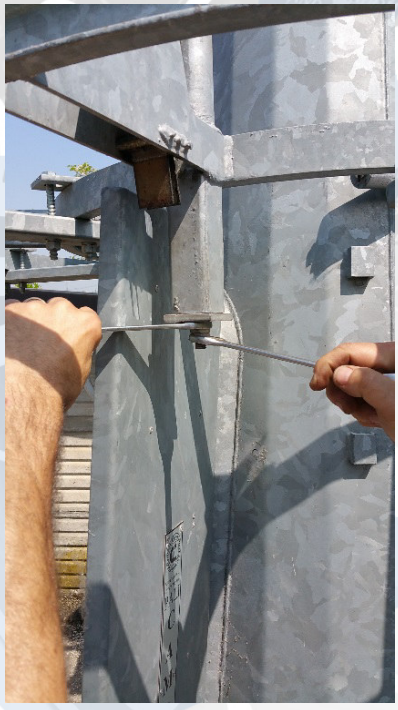

Remove 3 rope adjuster **(it is important not to leave them attached to ropes in order to not affect the operation of the mobile crown).**

REGULATION EXAMPLE

- Rope "A": 43 cm
- Rope "B": 45 cm
- Rope "C": 46 cm

Act on the tightener until you bring the ropes "A" and "C" at 45 cm

13. FIRST HOOKING AND SWITCH LIMITER ADJUSTING

These operations concern the hooking and unhooking phases of the mobile crown to the trailing head.

Mount the switch limiter rod and the switch limiter as in the photo (switch limiter in the low position).
Once the 3 ropes adjuster are removed raise the crown with a continuous action. When the distributor comes close to the top of the switch limiter rod, pass from a continuous raising to an intermittent (strokes) until you hear the click of the connecting rods on the trailing head (see photo below).
At this point give an extra raise lightly of about 1cm to be sure that all the 3 connecting rods have passed the labyrinth.



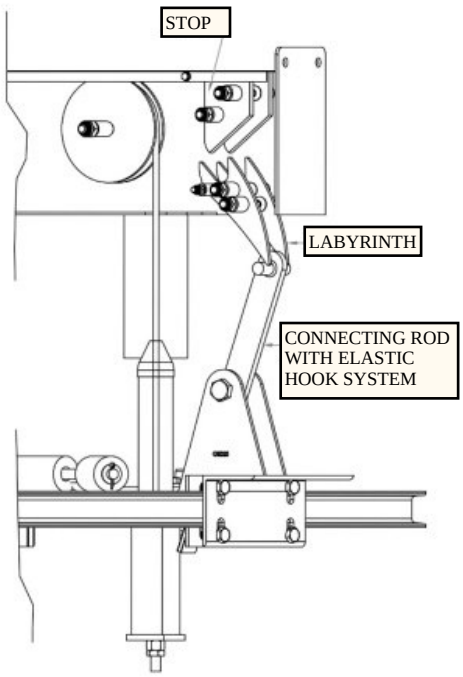

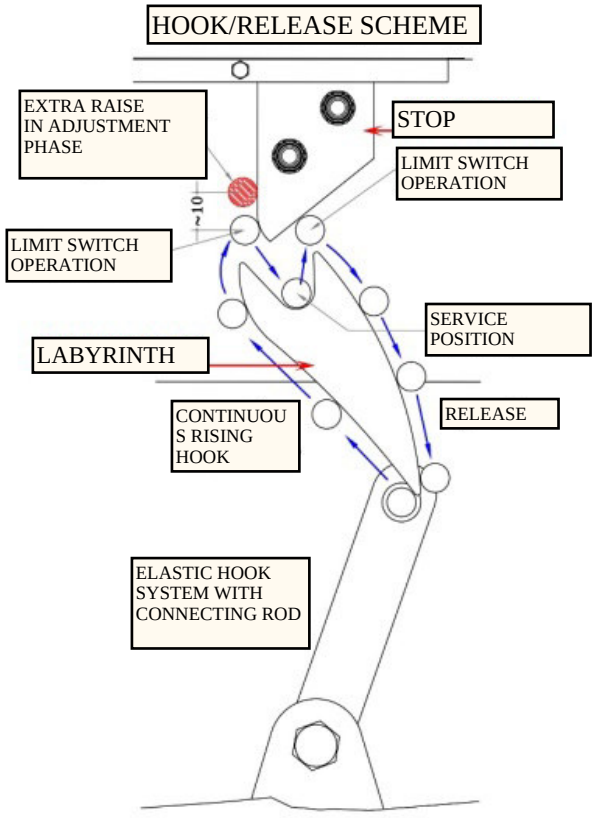

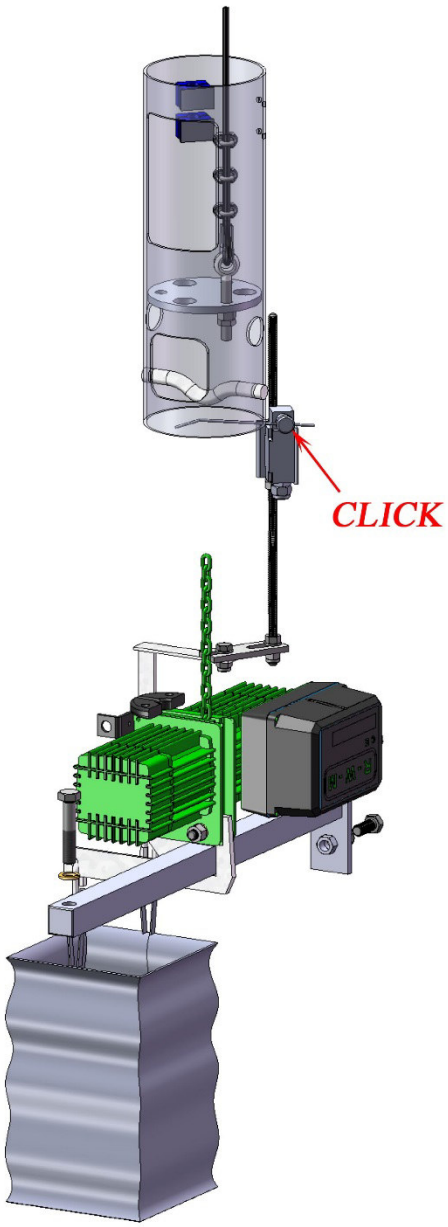

Bring the switch limiter placed to the distributor until it intervenes; You should hear a click sounds made from the switch limiter.

Tighten the screw and the nuts on the switch limiter rod.

Press the DOWN button on the push button and go on in lowering until the chain of the hoist is release. (MECHANICAL HOOKING IS DONE).

To release the crown, proceed with the following steps:

Press UP on the push button (the distributor will come down) until the switch limit intervenes.

CAUTION: DURING THE RAISE KEEP BUTTON PRESSED, BECAUSE IT IS THE SWITCH LIMIT WHICH LOCK THE RAISSE ITSELF.

At this point press the DOWN button to lower the crown.

Repeat HOOKING AND UNHOOKING 2/3 TIMES.

14. PUT INTO SERVICE OF THE SAFETY BRAKE SYSTEM

Once the proper working of the movement has been checked with guide / brake units completely open towards the outside of the Mobile Crown, we start to put into service the brake system. To do this it is necessary to make the trolley with the drive / brake assembly working by inserting the supplied springs in their seats (as shown in the drawing below). For each trolley 2 springs must be mounted. By now, the three trolleys will drive the raising and lowering, expanding and clinging following the diameter of the shaft.
In case of failure of the wire ropes or the lifting chain the braking element acts on the latching of 3 trolleys racks. The fall of the Mobile Crown will therefore be prevented due to the increase of the section of the shaft.

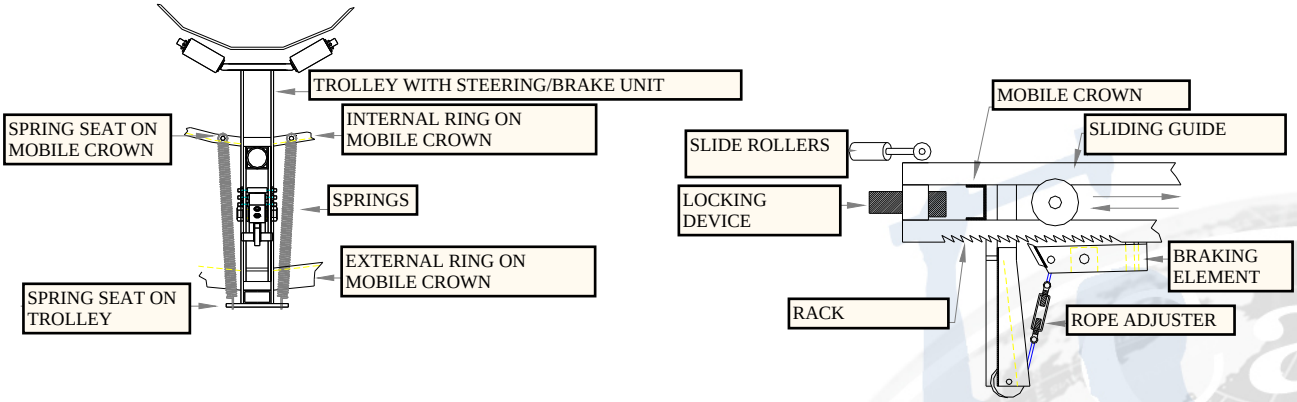

The brake system does not require any special care, only checking of the springs, the driving rolls and a greased of driving lanes, racks and springs themselves.

15. OPERATING RULES

- Power the tower from the general board
- Open the door, unplug from the socket the EEC plug that powers the floodlights and insert it into the distributor
- Power the lifting unit by inserting the EEC plug on the interlocked socket
- To carry out subsequent operations, take out of range of the Mobile Crown and carry on the following operations to unhook and lower the Mobile Crown:
    - Press the "UP" button on the push button of the hoisting unit until the intervention of the switch limiter, which lock the hoist
    - Press "DOWN" to lower the Mobile Crown
- To perform maintenance and ground testing of the floodlights, use the electrical cable attached to the junction box fixed to the crown.
- Once maintenance has been carried out, perform the following operations to attach the Mobile Crown:
    - Press the "UP" button until you see the distributor appearing on the door
    - From now on proceed in the raising “by shots" until the distributor arrives at about 10cm of the switch lever
    - Proceed then with a continuous raising until the intervention of the switch limiter (which coincides with the click of the connecting rods that reach their grooves) which blocks the electrical units
    - Press the "DOWN” to hook the Mobile Crown on the trailing Head

Once the crown is attached:

- Pass the passive safety chain through the distributor and secure it to the appropriate connections welded inside the tower
- Disconnect the power plug of the electric unit (hoist) and, in the case of a trolley-mounted hoist, remove it from the mast
- Power the floodlights by inserting the EEC plug into the interlocked socket and close the switch
- Close the door

IN CASE ALL 3 RODS DO NOT HOOK, WHEN YOU PRESS THE BUTTON "DOWN" TO HOOK THE MOBILE CROWN, SINCE ONE OR MORE' ROPES ARE NOT RELIEVED FROM THE WEIGHT OF THE CROWN ITSELF, THE DISTRIBUTOR WILL TILT TOWARDS THE CABLE/S STILL UNDER TENSION. WE HAVE THEREFORE TO ACT WITH BUTTONS "UP" AND "DOWN" TO UNHOOK THE ROD STILL HOOKED.

LOWER THE CROWN AND REPEAT THE ADJUSTMENT OF THE ROPES. IF THE HOOK HAS NOT OCCURRED 'THIS IS DEFINITELY DUE TO WRONG ADJUSTMENT OF THE ROPES

16. WARNING

- Do not stand under the Mobile Crown during the raising and lowering of the same
- Mark out the area where you will carry on the maintenance operations with appropriate barriers or tape

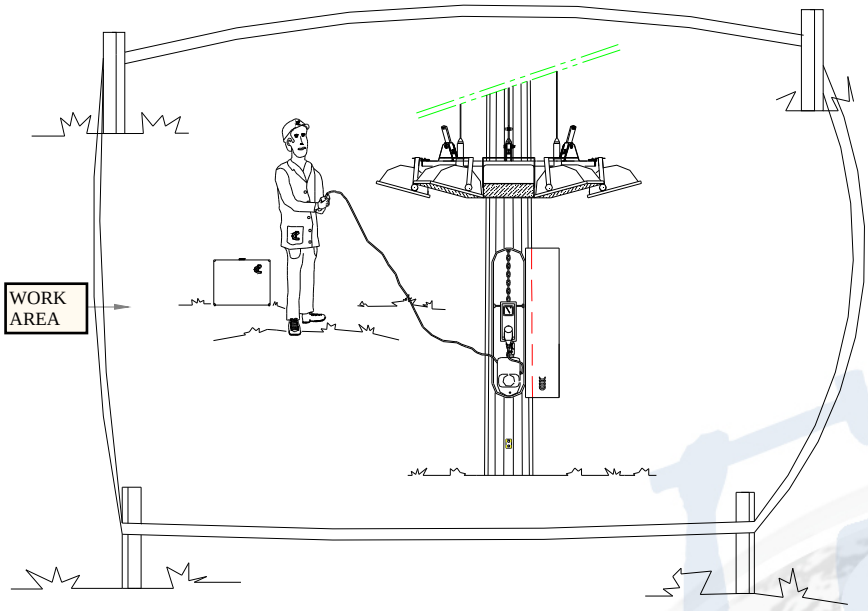

- Carry out hooking / unhooking of the Mobile Crown at least 2 times a year (every 6 months)
- Record all maintenance in the relevant register hereby enclosed
- the maintenance of the floodlights must always be combined with a check of the ropes and tightening of all bolts and nuts
- Once a year schedule a checkup of the electric hoist as described in the maintenance manual of the hoist
- The chain supplied with the electric unit must always be lubricated
- If for lighting needs a different aiming of the floodlights, you must repeat the adjustment operations of the ropes
- The maintenance operations must be performed in favorable weather conditions (no wind)
- The operator performing maintenance of the mast/s must be aware of the operating instructions contained in this manual

17. DISMANTLING OF THE HIGH MAST

Given the peculiarities of the structures and equipment required to carry out the dismantling of the masts with Mobile Crown, it is better that in case it is required the dismantling of a mast this activity is carried out by specialized personnel, authorized and instructed by this company.

NOTE: At the end of the product's life cycle, the owner of the good shall dispose the material in accordance with current environmental regulations. The shaft, crown, trailing head and distributor are made of fully recyclable steel.

PALI CAMPION srl
Via A. De Gasperi, 45 • 45025 Fratta Polesine (RO) • Italy
tel + 39 0425 668686 • mail@palicampion.it
www.palicampion.it

PALI E TORRI IN ACCIAIO STEEL COLUMNS AND MASTS

MAINTENANCE MANUAL HIGH MAST WITH MOBILE CROWN

pec@pec.palicampion.it • P.iva 01429820291 • cod.dest. J6URRTW
ISO9001 • ISO14001 • ISO45001 • ISO50001 • SA8000 • EN40 • EN1090 • EN3834 • D.M.17/01/2018 • ISO14067

MAINTENANCE

Introduction:

The maintenance on the lighting mast, must be performed by authorized personnel for this purpose, who has to know the operating instructions as well as our handling system.
In the case you have to substitute some elements, they must be original spare parts.
The maintenance of the electric hoist must be carried out according to what is mentioned the instruction manual and safety that is always included in the delivery.

Maintenance:

In order to ensure the proper functioning of the lighting mast, a MAINTENANCE SCHEDULE has been worked out. three key periods for maintenance have been defined, as following:

- **annual maintenance (TYPE A)** which consists of a check - up of the mobile crown brought to ground level, of all the elements that constitute it, as well as a control of the electrical components, and a check of what is placed inside the shaft.
- **maintenance to 5 year (TYPE B)** which includes all the maintenance operation TYPE A, and also requires careful control of the at the top of the stem parts.
- **maintenance to 10 years (TYPE C)** which incorporates all of the maintenance operation TYPE A and TYPE B, as well as a tree control (rod, any base plate) in order to check its status and to check the condition of the protective coating (galvanizing).

ALL THE OPERATIONS OF MAINTENANCE AND CONTROL WILL BE RECORDED IN THE FORMS ATTACHED TO THIS FILE.

MAINTENANCE PROGRAM

TABLE FIRST MAINTENANCE

FIRST CHECK	TYPE A	TYPE B	TYPE C
Check that the earth connection is connected to the structure and is efficient	YES	YES	YES
Check that the door's locking device is efficient	YES	YES	YES
Make sure the safety chain is positioned as per instructions and not too tight	YES	YES	YES
Check the efficiency of the electrical connections at the base of the mast	YES	YES	YES
Check that the phase sequence is such that the lifting unit works with the correct logic (You can verify it feeding the lifting units)	YES	YES	YES
Check the efficiency of the safety switch limiter (connecting the lifting unit and verifying that acting on the rod at the bottom it does not work in UP)	YES	YES	YES
Check the condition of the wire ropes and the electric cables on the distributor which must not be pulled (with mobile crown hooked)	YES	YES	YES
Check the tightening of the clamps on the ropes (on the distributor)	YES	YES	YES

MAINTENANCE TABLE OF THE MOBILE CROWN

WITH CROWN LOWERED:	TIPO A	TIPO B	TIPO C
Make sure the sheath of the ropes, as well as electric /s cable/s is intact	YES	YES	YES
Check the tightening condition of all bolts and nuts	YES	YES	YES
Check the tightening conditions of the clamps on the ropes	YES	YES	YES
Check the condition of elastic plates of the elastic coupling system (rods)	YES	YES *	YES *
Check that the brackets for floodlights and ballasts support are securely fastened to the mobile crown	YES	YES	YES
Check that electrical cables are in good condition and that wiring in boxes, on floodlights, and ballasts (on ballasts and floodlights are optional but recommended) do not present oxidations such as to compromise the functionality of the lighting system.	YES	YES	YES
Check that the distribution boxes always ensure the protection degree stated and that the connection with EEC accessories doesn't present oxidation such as to compromise the functionality of the lighting system	YES	YES	YES
Check the correct balancing of the mobile crown	YES	YES	YES
Check the operation of the floodlights (ground test)	YES	YES	YES
WITH THE MOBILE CROWN IN SERVICE POSITION:	**TYPE A**	**TYPE B**	**TYPE C**
Check that the hooking and unhooking operations of the mobile crown to the trailing head occur regularly	YES	YES	YES
Make sure that the safety switch limiter is positioned correctly	YES	YES	YES
MAINTENANCE OF THE MOBILE CROWN (at ground)	**TYPE A**	**TYPE B**	**TYPE C**
Check the condition of the springs	YES	YES *	YES *
Check the condition of the polyamide wheels	YES	YES	YES

*** it is advisable to replace the material.**

MAINTENANCE TABLE OF THE TRAILING HEAD

MAINTENANCE TRAILING HEAD	TYPE A	TYPE B	TYPE C
Check tightening of bolts and nuts securing the trailing head to the shaft	NO	YES	YES
Check conditions of carpentry	NO	YES	YES
Check condition of polyamide pulleys, pivots	NO	YES	YES

TABLE FOR STRUCTURE MAINTENANCE

STRUCTURE MAINTENANCE	TYPE A	TYPE B	TYPE C
Check condition of the structure and galvanization.	NO	NO	YES

MAINTENANCE TABLE FOR HOISTING UNIT

MAINTENANCE OF HOISTING UNIT	TYPE A	TYPE B	TYPE C
Please refer the operator to verify the instructions in the user manual and safety of the hoist included in to the supply.	/	/	/

The maintenance program reported concerns a normal environment, which may be a road interchange, parking etc. For special environments, the maintenance program should be implemented together with the designer - customer, considering the toughest aspects under which the facility will operate.

Furthermore, if the timing established by Pali Campion Srl turns out to be characterized by too long periods or too short for those who in the future will manage the facility, subject to our authorization they may be revised and adapted to the actual system requirements.

Any replacement of parts which prove worn or otherwise not suitable to secure the safe and proper operation of the lighting mast, will be done only and exclusively with original spare parts.
If not, so legal guarantees will fail.

CONTROL PROCEDURES:

TYPE OF MAST C.M	COMPONENT TO BE CONTROLLED	METHOD OF CONTROL	NORMAL CONDITION	REMEDY
ALL THE MODELL	SOCKET	Check the Integrity of the external structure Check operation by performing a number of open / close circuit tests	The peculiarity of the lock socket is that it doesn't allow the plug to slip out when the circuit is closed (position I), as well as the circuit cannot be closed t (transition from 0 to I) if a suitable plug it is not inserted before	In the case the conditions listed left do not occur replace the socket with one having the same characteristics.
ALL THE MODELL	STEEL ROPES POLYPROPYLENE SHEATHED	Check integrity of the sheath, the tightening of the clamps at the ends of the cables and threaded tightener	The cable must have perfect sheath all over its length, without fraying, obvious signs of bending. Clamps must be well made and regularly checked.	If you found loss on the sheathing, and consequent worn ropes, they t be checked by a technician to assess the true extent of the damage and then if it needs replacement of the cable / s
ALL THE MODELL	ELECTRIC CABLE	Check the Integrity of the sheath	The cable must have a perfectly intact sheath and when the crown is lowered it has not to be stretched but very soft.	If You found that the insulation is damaged it need to be checked by a technician to assess the true extent of the damage and then if it needs replacement / the cable / s. If you found that when the crown is lowered the cable is tight, loosen it by acting on the cable stop blocks fixed on the mobile crown
ALL THE MODELL	ELECTRICAL CONNECTIONS	Check the conditions of all electrical wiring.	All electrical connections must be perfectly done	Should you note any connections not well executed or that are worn out with the time being, make new connections replacing electric cables, if any

TYPE OF MAST C.M	COMPONENT TO BE CONTROLLED	METHOD OF CONTROL	NORMAL CONDITION	REMEDY
ALL THE MODELS	BRACKETS FOR FLOODLIGHT SUPPORT AND BALLASTS SUPPORT	Check the straightness of the brackets and check the ballast support to be orthogonal, check tightening of the coupling bolts with the mobile crown, as well as the tightening of the floodlight.	The brackets for floodlight support must be straight also after being loaded with the floodlights. The same applies to the brackets for ballasts support.	Mount the expected number of floodlight (if one floodlight for each bracket is foreseen do not put two floodlights. Observe the executive design in order not to install floodlight with different weights, which could create stress conditions on carpentry
ALL THE MODELS	HOOKING ELASTIC SYSTEM	Check feature of the connecting rods.	The structure must appear intact, you don't have to find bent parts, and the operating parts (elastic plates) if stressed will have to create the vibration of the overlying part (connecting rod).	IT IS 'THE MOST' IMPORTANT PART OF THE HANDLING SYSTEM Any sign that could be related to stressful situations or non-alignment with the trailing head should immediately be noticed for replacement. Should some elastic plates had lost their elastic characteristic it is possible to replace them without changing the whole system. If necessary, it is advisable to replace all three systems, and repeat the test for adjustment of the ropes and the safety switch. Limiter
ALL THE MODELSL	BOLTS AND NUTS	Check tightening of the bolts	The bolts must be perfectly tightened	If the bolts and nuts are not well tightened, make the tightening once again
ALL THE MODELL	POLYAMIDE PULLEY AND PIVOTS	Check the wearing conditions of the pulleys wiring ropes and cables, the respective pivots on the trailing head, the pivots supporting the elastic hooking system (connecting rods), on the mobile crown, as well as the driving whirl and respective pivot inside the base section for the shaft.	The pulleys must not show signs of wearing that can affect the sliding of the rope (on the trailing head) and the chain (driving whirl). The pivot must be undamaged and self-lubricating bushings free to rotate.	If the conditions reported are not observed the replacement of worn parts must be foreseen

TYPE OF MAST C.M	COMPONENT TO BE CONTROLLED	METHOD OF CONTROL	NORMAL CONDITION	REMEDY
ALL THE MODELS	SAFETY SENSOR (SWITCH LIMITER)	Check that the switch limiter intervenes correctly in the hooking and unhooking phases of the mobile crown to the trailing head.	HOOKING MOBILE CROWN The switch limiter intervenes at the point where the connecting rod entered into the labyrinth of the trailing head, is free, and then it makes a step forward, then, with a descent it leans against the seat of the labyrinth in the working position. RELASE MOBILE CROWN The switch limit rod intervenes at the point where the piston rod exits from the labyrinth, and then from the coupling seat. At this point, the crown can be lowered (DOWN). The intervention of the switch limit prevents that the clutch. intervenes into the hoist	If during the phases HOOKING – UNHOOKING of mobile crown to the trailing head it occurs that the engine clutch intervenes before the switch limiter, the status of the electrical contacts of the same must be checked; also, the status of the switch limit rod that may not be well-placed must be checked. If the suitability of the switch limiter is verified, its position on the adjustment rod must be modified to re-establish the correct operation of movmejment system (which must hook and uunhook without the intervention of any security of the electric motor). If ion the contrary encounter any problems on the rod or on electrical contacts, the switch limiter must be promptly replaced.
ALL THE MODELS	CONNECTION TO THE GROUND RING	Check existence of the metallic mass connection to the earthing system	The earth conductor must be connected to the appropriate connections on the shaft	If it is not connected, restore the connection immediately.
ALL THE MODELL	ELECTRIC HOIST	Check tyre pressure	The trolley t must have the 2 wheels at a suitable pressure to allow the easy handling at site.	If the wheels are inflated inflate them, while if they are perforated the must be repaired or replaced
ALL THE MODELS	ELECTRIC HOIST	the operator has to refer to the vision of USER AND SECURITY electric hoist supplied with the delivery		
ALL THE MODELS	CHAIN	the operator has to refer to the vision of USER AND SECURITY electric hoist supplied with the delivery		

PALI CAMPION srl
Via A. De Gasperi, 45 • 45025 Fratta Polesine (RO) • Italy
tel + 39 0425 668686 • mail@palicampion.it
www.palicampion.it

MAINTENANCE REGISTER FOR HIGH MAST WITH MOBILE CROWN

pec@pec.palicampion.it • P.iva 01429820291 • cod.dest. J6URRTW
ISO9001 • ISO14001 • ISO45001 • ISO50001 • SA8000 • EN40 • EN1090 • EN3834 • D.M.17/01/2018 • ISO14067

ANNUAL MAINTENANCE (TYPE A) MAST CM

DATE	OPERATION	RESULT	SIGNATURE	NOTE

ANNUAL MAINTENANCE (TYPE A) MAST CM

DATE	OPERATION	RESULT	SIGNATURE	NOTE

5° YEAR MAINTENANCE (TYPE B) MAST CM

DATE	*OPERATION*	RESULT	SIGNATURE	NOTE

5° YEAR MAINTENANCE (TYPE B) MAST CM

DATE	*OPERATION*	RESULT	SIGNATURE	NOTE

10° YEAR MAINTENANCE (TYPE C) MAST CM

DATE	OPERATION	RESULT	SIGNATURE	NOTE

10° YEAR MAINTENANCE (TYPE C) MAST CM

DATE	OPERATION	RESULT	SIGNATURE	NOTE

NOTICE

The civil and criminal liability in case of accident or damage caused by a failure on maintenance of the roads or its accessories (among the we can find the hypothesis of a lighting plant) will be in charge of the owner of them.

Especially as far as the criminal liability is concern, i twill be in charge of the person that, at the moment of the accident, will be recognised as holder of the legal duty to grant the perfect maintenance of the above plant.

In order to clarify better, in case of accident caused by a lack of, or to a bad maintenance of the high mast located in centre of a town, the legally liable person will be identified by the legal representative of the municipality, because he is owner and responsible of the above-mentioned structure.

Criminal Responsibility

The art. 35 paragraph 4 of D.Lgs. 626/94, provides that: "the employer implements and organise the suitable technical measures in order to reduce to the minimum the risk connected to the use of the devices so that they are:
a) installed according to the manufacturer's instructions;
b) properly employed;
c) they are subjected to a suitable maintenance in order to grant, with the time being, that they comply to the safety requests ".
Failure to comply with the obligations imposed by the above standards, exposes the owner of the high mast to the risk of application of penalties, as expressly provided for by art. 89 D.Lgs. 626/94

Furthermore, according to art. 589 e 590 C.P, the owner of the lighting plants with high masts, may be considered criminal liable, in case that he is not able to prove that he has duly carried out the checking and surveillance on the plants of his property, having put in act all actions and measures at his disposal, to keep the plant in good conditions, carrying out regular maintenance

Civil liability

Art. 2043 C.C. contents the principle that "any intentional or negligent did, which causes unjust damage to others, obliges the one who committed it to pay damages ", underlying that the fact which is source of this responsibility may also consist of an omission
It is also established by the following articles of the Civil Code:
- art.1669 "The manufacturer is liable for damaged to others caused by sever defects of workmanship, for a period of 10 years from the date of manufacturing"
- art. 2050 "Anyone who cause a damage to others during an activity which is dangerous itself or it is dangerous because of the means used for it, is liable to pay damages unless he can prove which he has undertaken all the steps to avoid the damage";
- art.2051 "each one is responsible for the damage caused by things under his care unless he can prove that it was and accidental event ";
- art.2053 "The owner of a building or other constructions is liable of damages caused by their decay unless he can prove that it is not due to a lack of maintenance or manufacturing defect ".

In case of accident, the owner must provide evidence that he has organised all the activities taking all the precautions that seemed suitable to avoid the damage, give evidence that the damage occurred was unpredictable, and consequently he has to identify the cause of the damage or the proof that the responsibility of the damage itself can be in charge of others persons